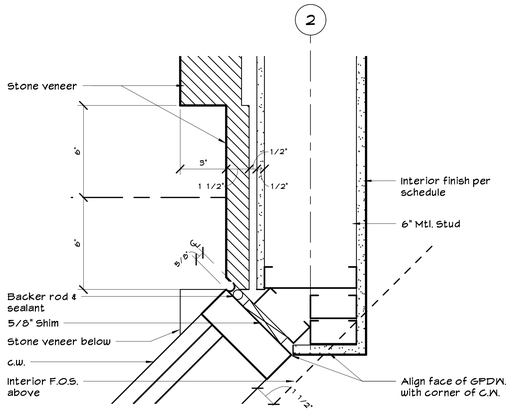

12 LOBBY BAY JAMB
3" = 1'-0"

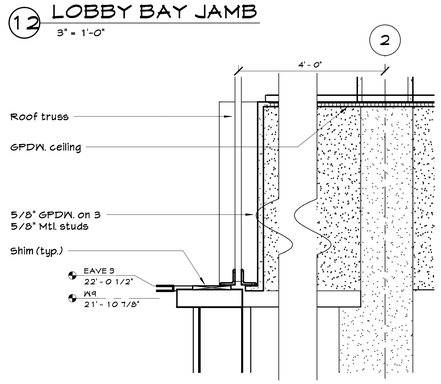

13 LOBBY BAY HEAD
1 1/2" = 1'-0"

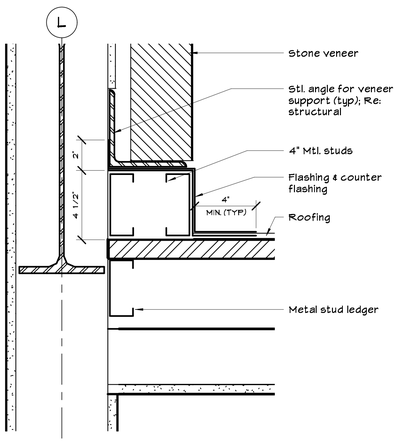

14 STAIR 3 ROOF TO WALL
3" = 1'-0"

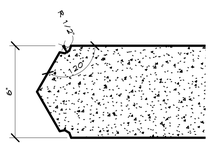

15 PRECAST HEARTH
3" = 1'-0"

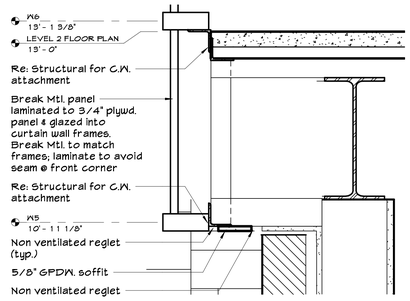

9 LOBBY BAY SILL
1 1/2" = 1'-0"

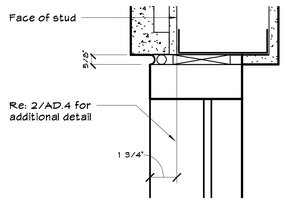

10 GRILL JAMB @ BELL TOWER
3" = 1'-0"

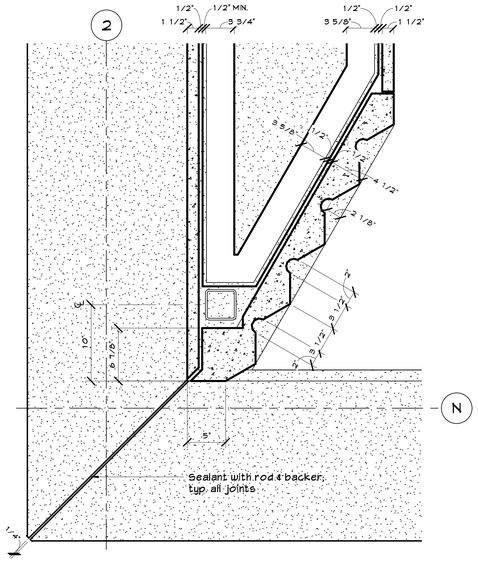

5 BELLTOWER QUARTER PLAN DETAIL
1 1/2" = 1'-0"

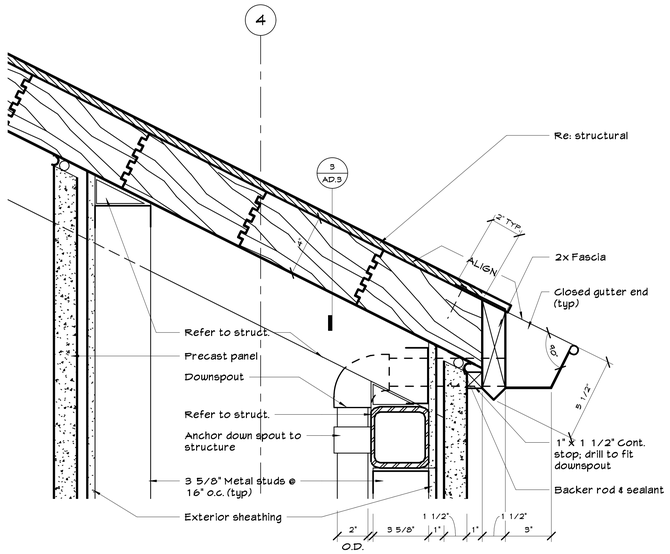

1 BELLTOWER EAVE
3" = 1'-0"

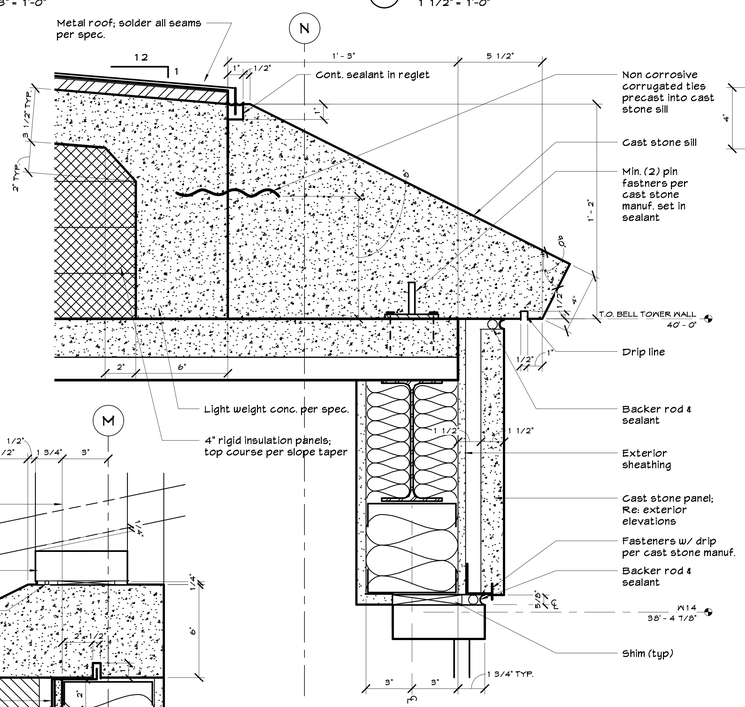

6 BELL TOWER SILL "B"
3" = 1'-0"

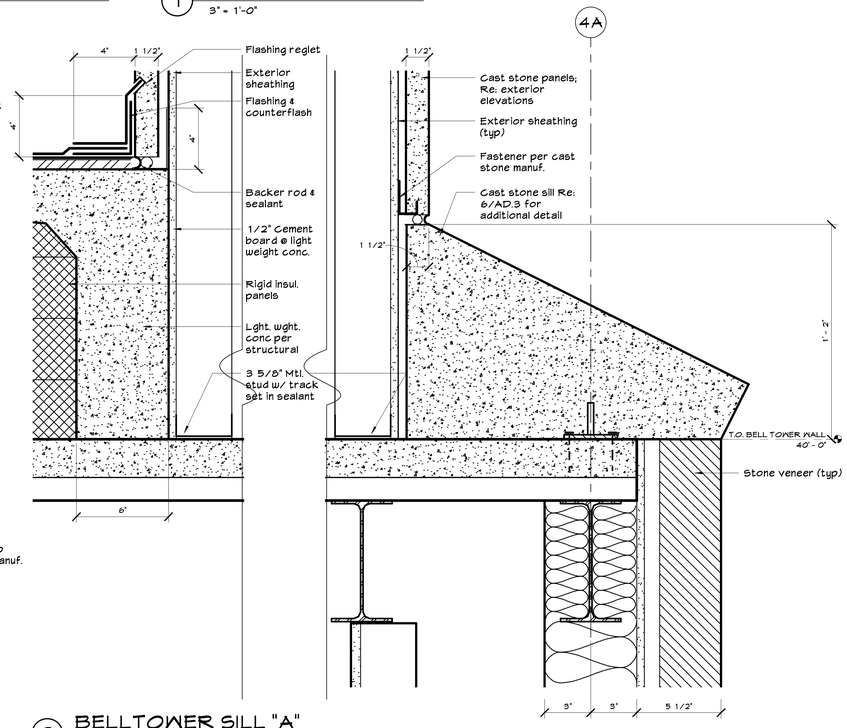

2 BELLTOWER SILL "A"
3" = 1'-0"

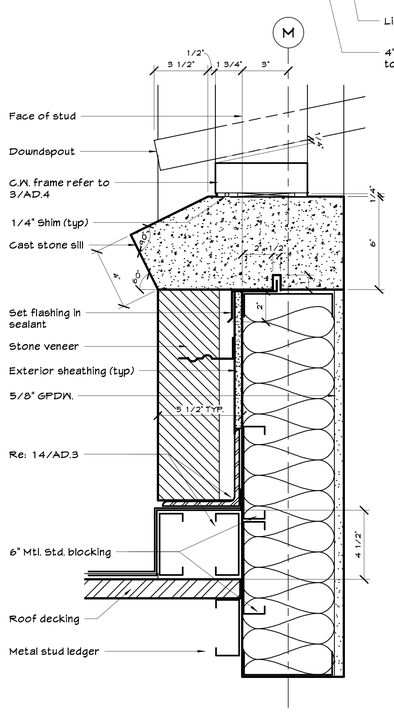

11 DRAIN @ BELL TOWER
3" = 1'-0"

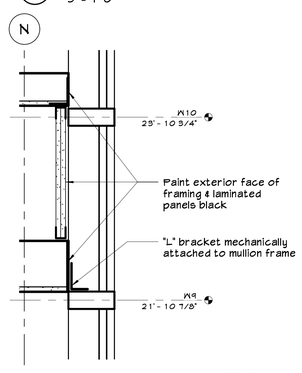

8 C.W. TRANSOM "A"
1 1/2" = 1'-0"

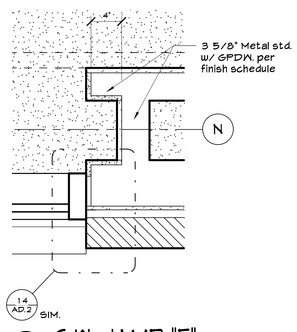

7 C.W. JAMB "E"
1 1/2" = 1'-0"

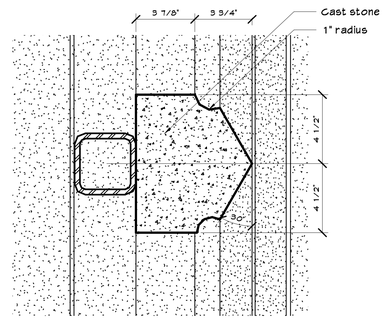

4 CAST CROSS
3" = 1'-0"

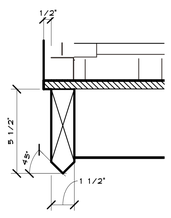

3 CROSS GABLE END
3" = 1'-0"

PROJECT

REMODEL AND ADDITION TO:
SHARP CHAPEL

Sharp Memorial Chapel

THE UNIVERSITY OF TULSA
600 SOUTH COLLEGE AVENUE
TULSA, OKLAHOMA
74104

ARCHITECT

BRIAN LOYLD FREESE ARCHITECTURE
6144 S. LEWIS
SUITE 500
TULSA, OKLAHOMA
74136-1001
TELEPHONE
918.744.7887

CONSULTANT

SEAL

APPROVAL / DATE

KEYPLAN

DRAWN BY: J.W.S. / G.M.V.
SCALE: As indicated
DATE: 11/08/02
REVISED: 11/08/02

PROJECT NO.: 0101
FILE NAME:

PAGE: DETAILS

AD.3