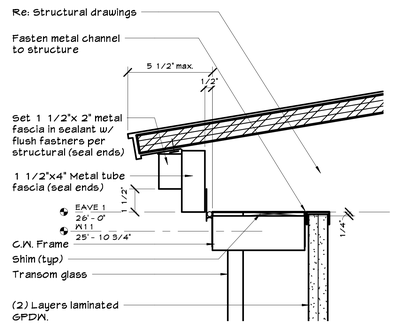

25 C.W. BAY EAVE
3" = 1'-0"

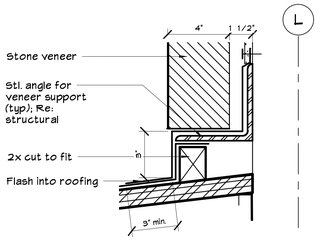

26 VENEER @ BAY ROOF
3" = 1'-0"

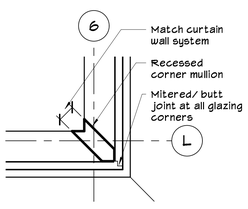

22 C.W. MITER
1 1/2" = 1'-0"

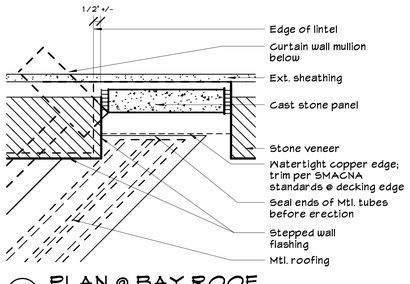

27 PLAN @ BAY ROOF
3" = 1'-0"

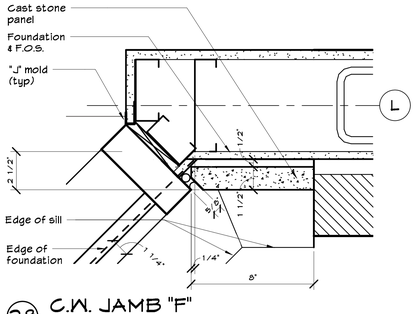

28 C.W. JAMB "F"
3" = 1'-0"

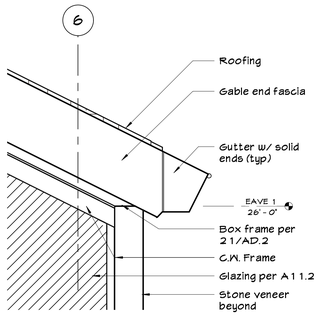

20 C.W. 6 @ EAVE
1 1/2" = 1'-0"

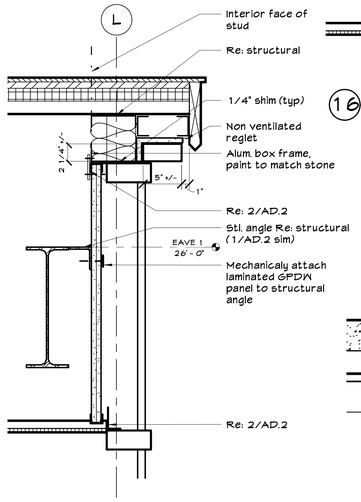

21 EAVE @ C.W. 6
1 1/2" = 1'-0"

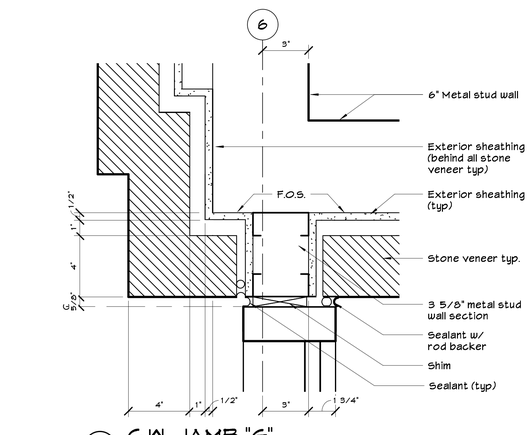

18 C.W. JAMB "G"
3" = 1'-0"

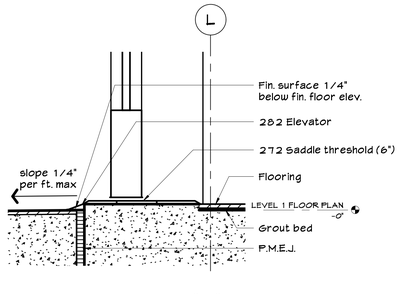

23 THRESHOLD "A"
3" = 1'-0"

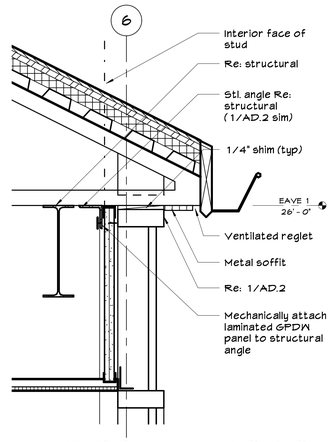

16 WINDOW WALL @ EAVE
1 1/2" = 1'-0"

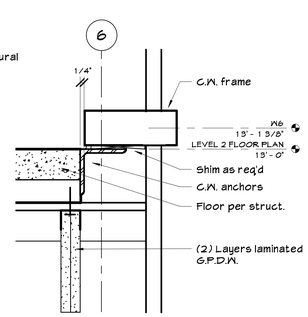

17 TYP. FLOOR TRANSOM
3" = 1'-0"

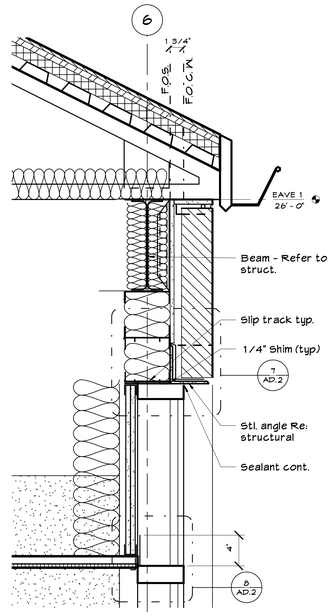

12 WEST WALL WINDOW
1 1/2" = 1'-0"

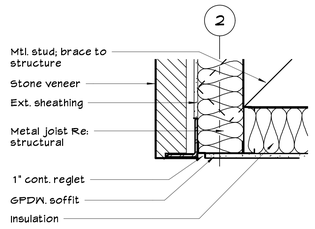

13 CEILING @ FOYER 113
1 1/2" = 1'-0"

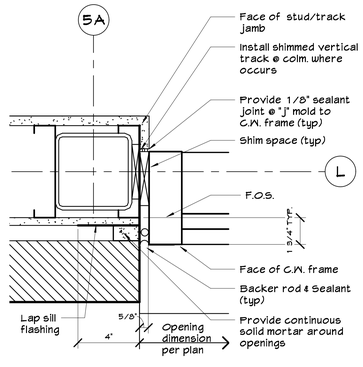

14 C.W. JAMB TYP.
3" = 1'-0"

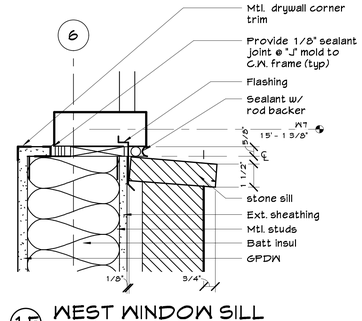

15 WEST WINDOW SILL
3" = 1'-0"

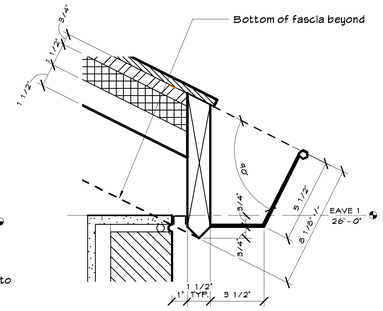

5 FASCIA/GUTTER
3" = 1'-0"

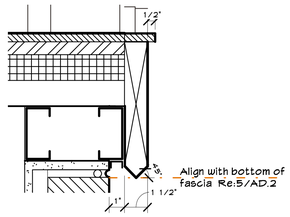

6 GABLE END O.H.
3" = 1'-0"

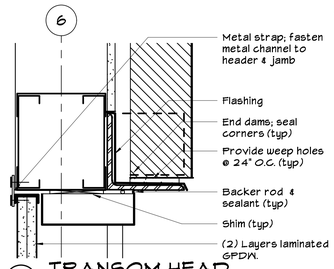

7 TRANSOM HEAD
3" = 1'-0"

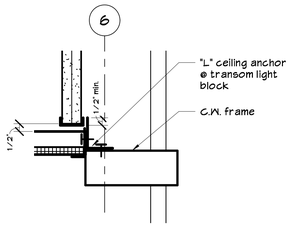

8 TRANSOM/CEILING
3" = 1'-0"

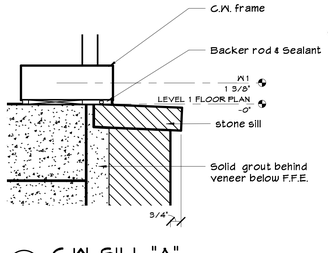

9 C.W. SILL "A"
3" = 1'-0"

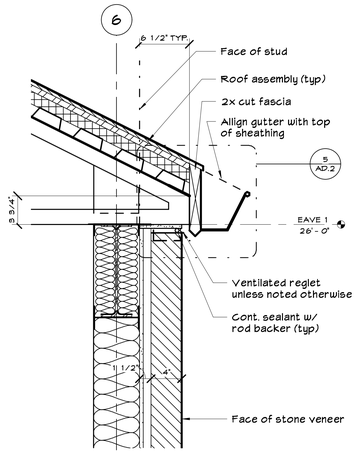

1 6/12 EAVE
1 1/2" = 1'-0"

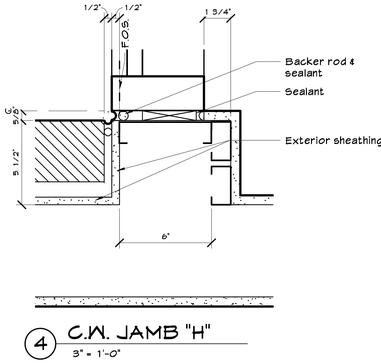

2 CEILING @ STUDENT ENTRY
3" = 1'-0"

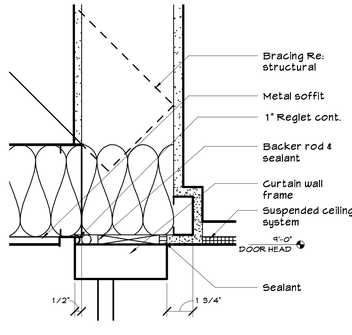

3 C.W. HEAD "A"
3" = 1'-0"

4 C.W. JAMB "H"
3" = 1'-0"

PROJECT

REMODEL AND ADDITION TO:
SHARP CHAPEL

Sharp Memorial Chapel

THE UNIVERSITY OF TULSA
600 SOUTH COLLEGE AVENUE
TULSA, OKLAHOMA
74104

ARCHITECT

BRIAN LOYD FREESE ARCHITECTURE
6144 S. LEWIS
SUITE 500
TULSA, OKLAHOMA
74136-1001
TELEPHONE
918.744.7887

CONSULTANT

SEAL

APPROVAL/DATE

KEYPLAN

DRAWN BY G.M.V. / J.W.S.
SCALE As indicated
DATE 11/08/02
REVISED 11/08/02

PROJECT NO. 0101
FILE NAME

PAGE DETAILS

AD.2